A800

SETUP SHEET

Alterations by Arn0 at PetitRC.com

NAME	Max Mächler	DATE	
COUNTRY	Germany	TEMP.°C AIR / TRACK	/
RACE	MCSS Open 2016		
TRACK	Althengstett		

		CARPET ✔	ASPHALT ☐
TRACK CONDITION	TECHNICAL ✔	MIXED ✔	FAST ✔
TRACTION	LOW ☐	MEDIUM ✔	HIGH ✔

FRONT

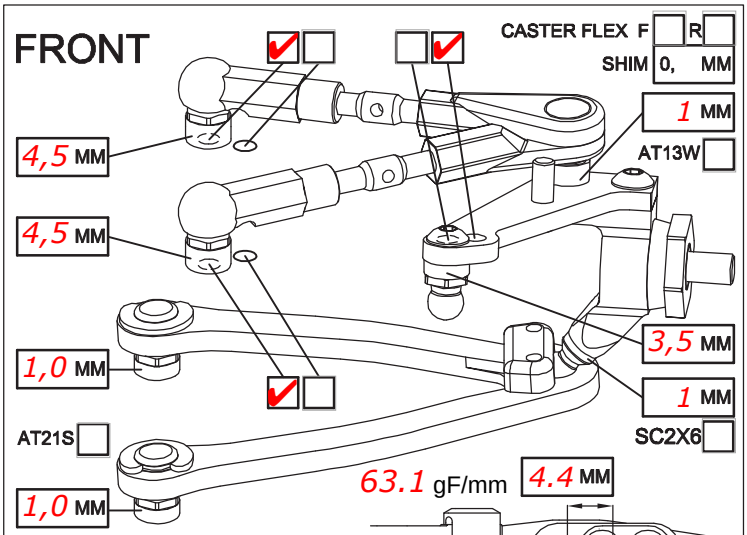

63.1 gF/mm

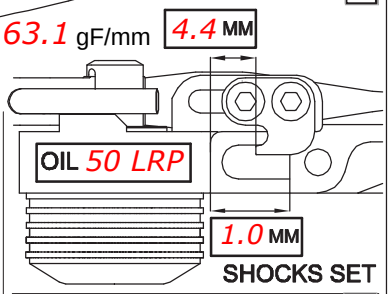

SHOCKS SET

CAMBER ANGLE / °	2	ROTOR	STD ✔ ☐
CASTER ANGLE / °	4	SPRING	STD ☐ S ✔
TOE ANGLE / °	-1° each side	DAMPER	D2.1 ✔ ☐
RIDE HEIGHT / MM	5.2	ACTION	SYM. ✔ ASYM. ☐
DOWNSTOP / MM	5.8	SRS/RHS ARR.	I ✔ II ☐
UPSTOP / MM	-		
STABILIZER Ø / MM	1.2		
LOW ARM	C04AL ☐ c04m ✔		
STEERING ARM	STD ✔ ☐		
WHEEL SPACER / MM	0,5mm		

FRONT DRIVE ☐ GD3 ☐ SPOOL ✔ GD2B ☐

DIFF OIL | DIFF WASHERS

DOGBONE DRIVE ST17-1 ✔ ST11 ☐ ST12 ☐ BB ✔ ST02 ☐

REAR

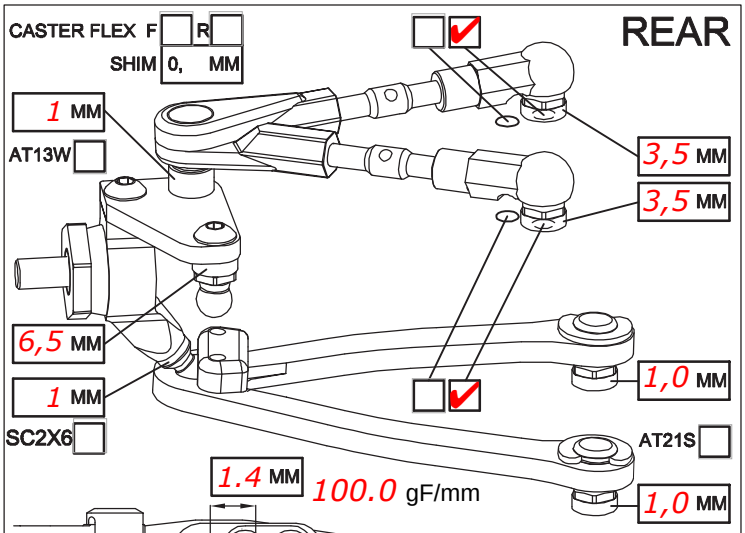

100.0 gF/mm

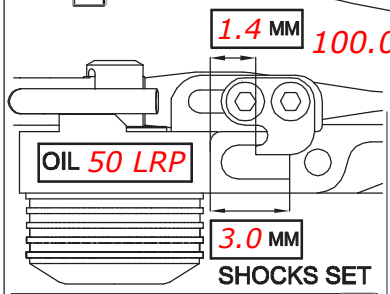

SHOCKS SET

CAMBER ANGLE / °	2	ROTOR	STD ✔ ☐
CASTER ANGLE / °	-2	SPRING	STD ☐ S ✔
TOE ANGLE / °	2.5	DAMPER	D2.1 ✔ ☐
RIDE HEIGHT / MM	5.4	ACTION	SYM. ✔ ASYM. ☐
DOWNSTOP / MM	4.4	SRS/RHS ARR.	I ✔ II ☐
UPSTOP / MM			
STABILIZER Ø / MM	1.0		
LOW ARM	C04AL ☐ c04m ✔		
STEERING ARM	STD ✔ ☐		
WHEEL SPACER / MM	-		

REAR DRIVE ☐ GD3R ☐ GD2B ✔

DIFF OIL 5000 | DIFF WASHERS large

DOGBONE DRIVE ST11 ☐ ST12 ☐ BB ✔ ST17-1 ☐ EVD ☐

FRAME FLEX SETTING

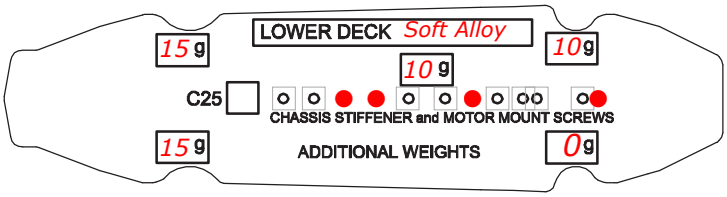

CHASSIS STIFFENER AM110 ☐ AM115 ☐ ST130 ✔

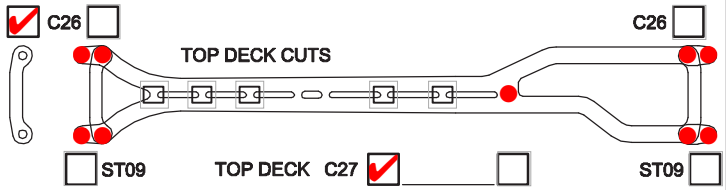

COMMENTS

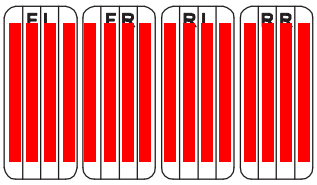

TIRES	FRONT	REAR
BRAND	Volante ETS	Volante ETS
INSERTS		
WHEELS		
ADDITIVE	ETS	ETS

MOTOR LATERAL SHIFT / MM		MOTOR	13,5T MM
ACKERMANN SHIMS / MM	1	SERVO	Awesomatix
DRIVE RATIO	4,5	ESC	LRP FLow WT
SPUR 100	PINION 42	BATTERY	LRP 6000
BODY	PF LTC-R lightweight (87g)	RECEIVER	Futaba
WING	std.		

BEST LAPTIME 11,4 QUALIF. / FINAL POSITION / 1

ESC SETTING 0-Boost

COMMENTS / IMPRESSIONS

CONTACT max.maechler@gmx.de