A800

SETUP SHEET

Alterations by Arn0 at PetitRC.com

NAME	Marcel Geiger	DATE 13.12.2015	TEMP.°C AIR / TRACK 25°C / 25°C
COUNTRY	Germany		
RACE	ETS Hrotovice	TRACK CONDITION	TECHNICAL ☐ CARPET ☑ MIXED ☑ ASPHALT ☐ FAST ☐
TRACK	Hrotovice	TRACTION	LOW ☐ MEDIUM ☐ HIGH ☑

FRONT

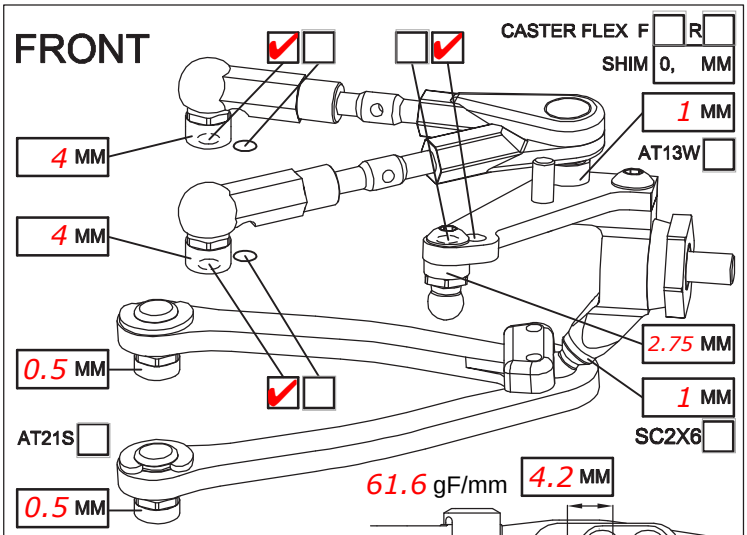

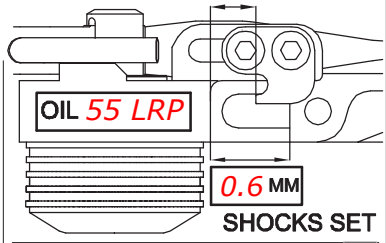

SHOCKS SET

CAMBER ANGLE / °	-2	ROTOR	STD ☑ ☐
CASTER ANGLE / °	4	SPRING	STD ☐ S ☑
TOE ANGLE / °	-1° each side	DAMPER	D2.1 ☑ ☐
RIDE HEIGHT / MM	5.2	ACTION	SYM. ☑ ASYM. ☐
DOWNSTOP / MM	6.0	SRS/RHS ARR.	I ☑ II ☐
UPSTOP / MM	-		
STABILIZER Ø / MM	1.3		
LOW ARM	C04AL ☑ ☐		
STEERING ARM	STD ☑ ☐		
WHEEL SPACER / MM	1.0		

FRONT DRIVE ☐ GD3 ☐ SPOOL ☑ GD2B ☐

DIFF OIL | DIFF WASHERS

DOGBONE DRIVE ST17-1 ☐ ST11 ☐ ST12 ☐ BB ☑ ST02 ☐

REAR

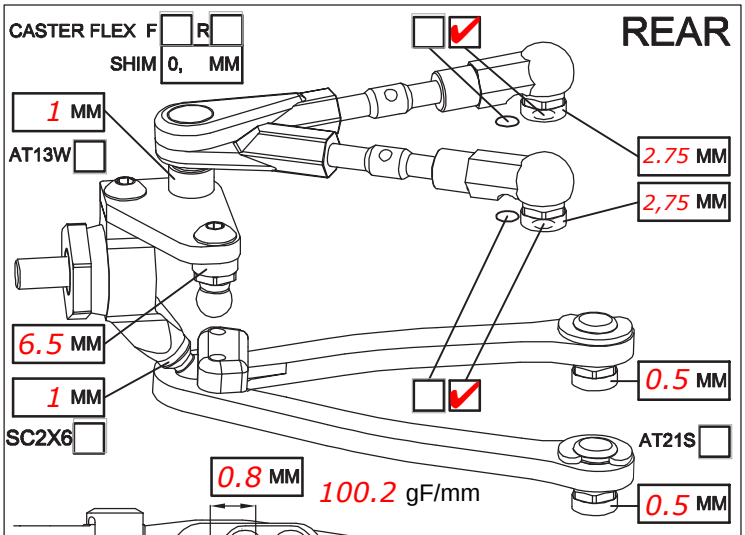

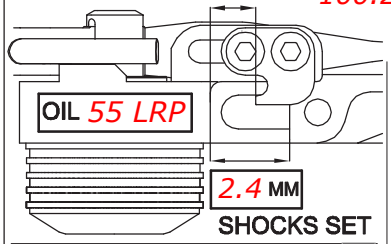

SHOCKS SET

CAMBER ANGLE / °	-2	ROTOR	STD ☑ ☐
CASTER ANGLE / °	-2	SPRING	STD ☐ S ☑
TOE ANGLE / °	2.5	DAMPER	D2.1 ☑ ☐
RIDE HEIGHT / MM	5.4	ACTION	SYM. ☑ ASYM. ☐
DOWNSTOP / MM	4.8	SRS/RHS ARR.	I ☑ II ☐
UPSTOP / MM			
STABILIZER Ø / MM	1.2		
LOW ARM	C04AL ☑ ☐		
STEERING ARM	STD ☑ ☐		
WHEEL SPACER / MM	0.5		

REAR DRIVE ☐ GD3R ☐ GD2B ☑

DIFF OIL 3000 | DIFF WASHERS large

DOGBONE DRIVE ST11 ☐ ST12 ☐ BB ☑ ST17-1 ☐ EVD ☐

FRAME FLEX SETTING

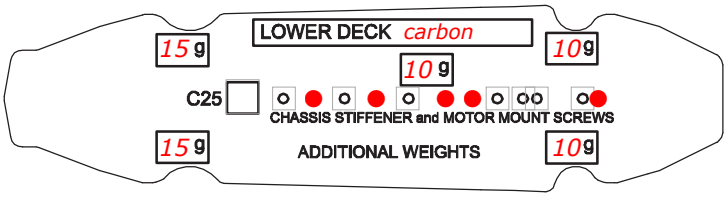

CHASSIS STIFFENER AM110 ☑ AM115 ☐ ST130 ☐

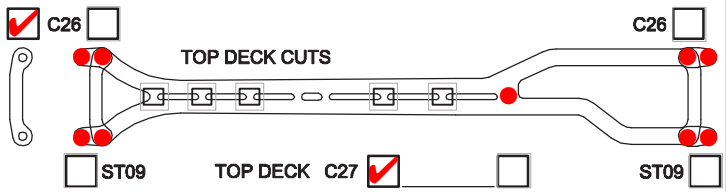

COMMENTS

Additional weight at the servo (10g) , 5g behind bumper, 5g under rear diff, 5g between motor and speedo.

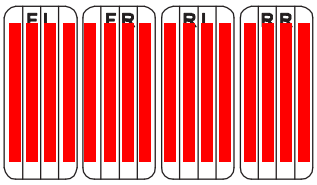

TIRES	FRONT	REAR
BRAND	Volante	Volante
INSERTS		
WHEELS		
ADDITIVE		

MOTOR LATERAL SHIFT / MM		MOTOR	LRP X20 5.5t
ACKERMANN SHIMS / MM	1	SERVO	Awesomatix
DRIVE RATIO	7.6	ESC	LRP FLow WT
SPUR 116	PINION 29	BATTERY	LRP 5600 LCG
BODY	PF Speed6 lightweight (90g)	RECEIVER	Sanwa
WING	std.		

BEST LAPTIME	QUALIF. / FINAL POSITION /
ESC SETTING	
COMMENTS / IMPRESSIONS	

CONTACT marcel.geiger@gmx.de